# Single-Beam Area Sensor

Single-Beam Area Sensor (IB Series)

IB-E-01-003001

※ The above specifications are subject to change without notice.

## Ordering Information

| IB | 20 | 8 | N | 24 |
|---|---|---|---|---|
| Series | Optical axis pitch | Number of optical axes | Control output | Power supply |
| IB: Single Beam Area Sensor | 20: 20mm | 8: 8EA 12: 12EA 16: 16EA 20: 20EA | N : NPN O.C output<br>P : PNP O.C output | 24:12~24VDC |
| | 40: 40mm | 4: 4EA 6: 6EA 8: 8EA 10: 10EA | | |

## Connections

| Emitter | | | | Receiver | | | |
|---|---|---|---|---|---|---|---|
| Color | Function | Color | Function | Color | Function | Color | Function |
| Green | MODE | Red | +V | Green | MODE | Red | +V |
| White | SYNC | Black | GND(0V) | White | SYNC | Black | GND(0V) |
| Blue | NC | Shield | F.G. | Blue | OUT | Shield | F.G. |

※ Unused wires must be insulated.
※ Shield cable (Frame Ground) must be grounded

■ NPN O.C Output

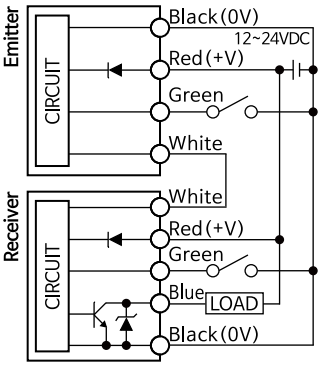


■ PNP O.C Output

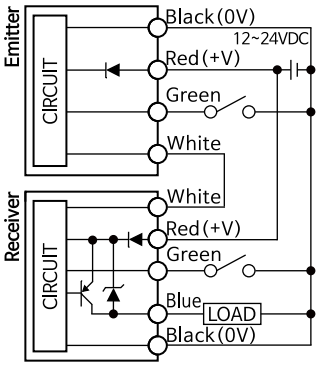


※ Please ensure that the sync signal line (SYNC) is not connected to +V or GND(0V)
※ Please connect the GND(0V) of the Emitter and Receiver to a common ground.

■ Emitter, Receiver Mode setting (Green wiring)

| Emitter | | | Receiver | | |
|---|---|---|---|---|---|
| Function | OPEN | 0V Connect | Function | OPEN | 0V Connect |
| Selection of transmission frequency | Frequency A | Frequency B | Selection of Light ON/Dark ON | Light ON | Dark ON |

※ After connecting the MODE function wire (green) to either OPEN or 0V, turn on the power.
※ The Emitter and receiver mode setting is an initial setting that can only be set when the product power is turned on.

## Dimensions

※Unit:㎜

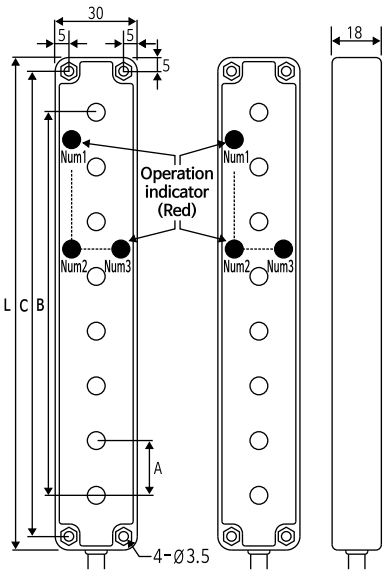


■ Optical axis Pitch (A) 20mm

| Model | Sensing height (B) | C | Product length (L) |
|---|---|---|---|
| IB20-8 | 140 | 170 | 180 |
| IB20-12 | 220 | 250 | 260 |
| IB20-16 | 300 | 330 | 340 |
| IB20-20 | 380 | 410 | 420 |

■ Optical axis Pitch (A) 40mm

| Model | Sensing height (B) | C | Product length (L) |
|---|---|---|---|
| IB40-4 | 140 | 170 | 180 |
| IB40-8 | 220 | 250 | 260 |
| IB40-12 | 300 | 330 | 340 |
| IB40-16 | 380 | 410 | 420 |

※ When installing, use M3 bolts for mounting screws and tighten with a torque of 2 N m or less.

## Operation Timing Chart

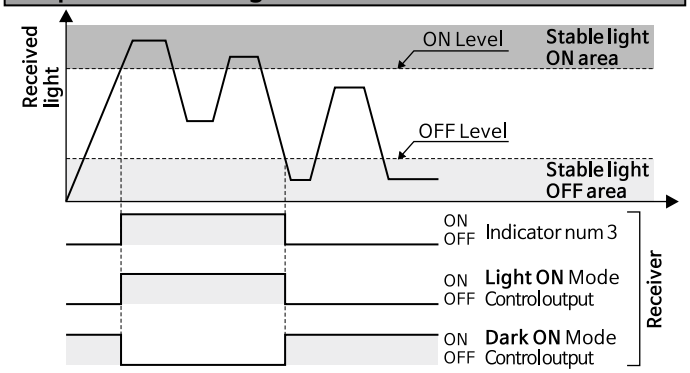


## Operation Indicator

☼:Indicator ON ●:Indicator OFF ▶:Flashing at 0.5 sec interval

| Item | Emitter indicator | | | Receiver indicator | | | |
|---|---|---|---|---|---|---|---|
| | Num 1 | Num 2 | Num 3 | Num 1 | Num 2 | Num 3 | Control output |
| Power ON | ☼ | ☼ | - | ☼ | - | - | - |
| Frequency A | - | - | ☼ | - | | | |
| Frequency B | - | - | ● | - | | | |
| Light ON mode | - | - | - | - | ☼ | - | - |
| Dark ON mode | | | | - | ● | - | - |
| Stable light ON | | | | - | - | ☼ | ON |
| Stable light OFF | | | | - | - | ● | OFF |
| Malfunction of Synchronous line | | | | ▶ | ▶ | ▶ | - |

## Installation and Function

■ **Interference protection** (Transmitted light frequency change)
- If you install 2set product, set one sensor to frequency A and the other to frequency B.

■ **Operation mode change** (Light ON, Dark ON)
- You can use the receiver's MODE wiring to select the mode according to your needs.

■ **Product Installation Function**
- Please install the Emitter and Receiver cables in the same direction.
- Please install the Emitter at a position where the receiver's operation indicator light 3 is turned on.

## Specifications

| Model | IB20 Series | IB40 Series |
|---|---|---|
| Sensing method | Through-beam | |
| Sensing distance | 0.1m ~ 5.0m | |
| Sensing target | Opaque material | |
| Min. sensing target | Opaque object over Ø30㎜ | Opaque object over Ø50㎜ |
| Control output (NPN, PNP O.C Output) | Load voltage: Max. 24VDC, Load current: Max.100㎃<br>Residual voltage: NPN Max. 1VDC, PNP Max. 2.5VDC | |
| Protection circuit | Reverse power protection, output short, Surge, Mutual interference prevation function | |
| Response time | Max. 20㎳ | |
| Power supply | 12VDC~24VDC±5% (Ripple P-P : Max. 5%) | |
| Current consumption | Emitter Max. 80㎃, Receiver: Max. 80㎃ | |
| Protection | IP40 (IEC standard) | |
| Ambient illumination | Sunlight: Max. 10,000Lux, Incandescent lamp: Max. 3,000Lux | |
| Ambient temperature | -10 ~ 50℃ (no freezing or condensation) | |
| Storage temperature | -20 ~ 60℃ (no freezing or condensation) | |
| Ambient humidity | 35% ~ 85% RH | |
| Material | Case: PA66-GF30, Front cover: acryl | |
| Accessory | Product, Instruction manual, Bolt | |
| Cable | Shield cable, Length: Less than 3m | |
| Approval | CE | |

## Cautions during use

■ Please test to ensure correct operation with the detected object before use.
■ Install properly according to the operating environment, location, and specified ratings.
- Installation environment and background (reflected light), Sensing distance and sensing target, Direction of target's movement, Feature data
■ If the installation environment has reflected light from the wall or floor, a interval distance of at least 0.5 m is required.
■ When installing multiple sensors closely, it may result in malfunction due to mutual interference.
- Install by referring to standard area sensor mutual interference prevention guidelines.
■ We are not responsible for any injury or accidents resulting from the use of this product in machinery.
■ Do not use the unit in the place where corrosive gas, high humidity, direct sunlight, radiant heat, vibration, impact, or salinity may be present.
■ Do not use in places where life protection, injury prevention, press safety, or property damage is expected.
■ Do not use in places where the product is exposed to direct sunlight or where the ambient illumination is higher than the specification.